Aim: Study of Boolean algebra truth tables for Logic Gate functions using AND, OR, NAND, NOR etc. ICs..

Electronic Parts Required:

(i) Power supply, 1 No : +5 V (Fix +5 V from variable voltage source if constant +5 V is not available)
(ii) AND Gate: IC 7408, 1 No
(iii) OR Gate: IC 7432, 1 No
(iv) NOT Gate: IC 7404, 1 No
(v) NAND Gate: IC 7400, 1 No
(vi) NOR Gate: IC 7402, 1 No
(vii) X-OR Gate: IC 7486, 1 No
(viii) 1 LED with 1K Ohm register in series, 1 Nos
(ix) Breadboard = 1 No
(x) Single strand wires = 8 - 10 Nos.

Introduction: Digital electronics represent signals by discrete bands of analog levels, rather than by a continuous range in "analog electronics". All levels within a band represent the same signal state in digital electronics. Relatively small changes to the analog signal levels due to manufacturing tolerance, signal attenuation or noise do not leave the discrete envelope, and as a result are ignored by signal state sensing circuitry.

In most cases in digital electronics there are only two states and they are represented by two voltage bands: one near a reference value (0 Volts), and the other a value near the supply voltage (+5 Volts) and are correspond to the "false" or OFF ("0"), and "true" or ON ("1"), values of the Boolean algebra, respectively.

In a standard "Boolean Expression", the input and output information of any "Logic Gate" or circuit can be plotted into a standard table to give a visual representation of the switching function of the system. The table used to represent the "boolean expression" of a logic gate function is commonly called a **Truth Table**. A logic gate truth table shows each possible input combination to the gate or circuit with the resultant output depending upon the combination of these input(s).

For example, consider a single 2-input logic circuit with input variables labeled as A and B. There are "four" = $\mathbf{2^2}$ possible input combinations of "ON" and "OFF" for the two inputs. However, when dealing with Boolean expressions and especially logic gate truth tables, we do not generally use "ON" or "OFF" but instead give them bit values which represent a logic level "1" or a logic level "0" respectively.

Then the four possible combinations of A and B for a 2-input logic gate is given as:

Input Combination 1. – "OFF" – "OFF" or (0, 0)
Input Combination 2. – "OFF" – "ON" or (0, 1)
Input Combination 3. – "ON" – "OFF" or (1, 0)
Input Combination 4. – "ON" – "ON" or (1, 1)

Therefore, a 3-input logic circuit would have 8 = $\mathbf{2^3}$ possible input combinations and a 4-input logic circuit would have 16 = $\mathbf{2^4}$, and so on as the number of inputs increases. Then a logic circuit with "n" number of inputs would have $\mathbf{2^n}$ possible input combinations of both "OFF" and "ON". In order to keep things simple to understand, we are here only dealing with simple 2-input logic gates, but the principals are still the same for gates with more inputs.

I. (A) 2-input AND Gate :

For a 2-input AND gate, the output Q is true if BOTH input A "AND" input B are both true, giving the Boolean Expression of: (Q = A and B).

Symbol	Truth Table		
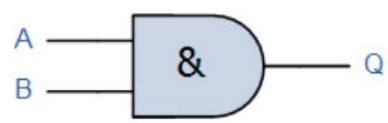 2-input AND Gate	A	B	Q
	0	0	0
	0	1	0
	1	0	0
	1	1	1
Boolean Expression Q = A.B	**Read as A AND B gives Q**		

Note that the Boolean Expression for a two input **AND** gate can be written as: **A.B** or just simply **AB** without the decimal point.

I. (B)) 2-input AND Gate 7408 IC :

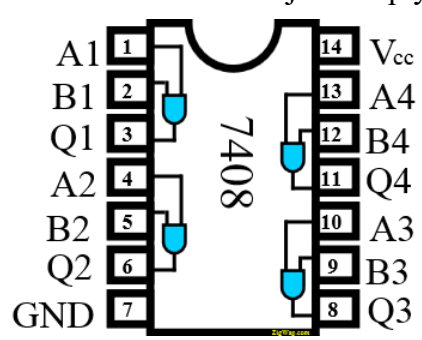

IC 7408 has four 2-input AND gates. The figure shows the input and output of AND gates. Use V_{cc} as +5 Volts. The input can be defined as +5 V = 1 and 0 V = 0 states.

$$\boxed{\mathbf{A.B = Q}}$$

II. (A) 2-input OR Gate :

For a 2-input OR gate, the output Q is true if EITHER input A "OR" input B is true, giving the Boolean Expression of: (Q = A or B).

Symbol	Truth Table		
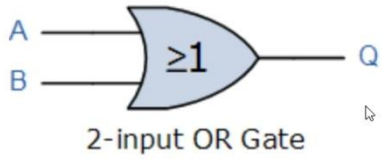 2-input OR Gate	A	B	Q
	0	0	0
	0	1	1
	1	0	1
	1	1	1
Boolean Expression Q = A+B	Read as A OR B gives Q		

II. (B)) 2-input OR Gate 7432 IC :

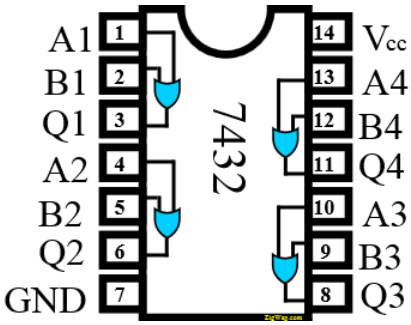

IC 7432 has four 2-input OR gates. The figure shows the input and output of OR gates. Use V_{cc} as +5 Volts. The input can be defined as +5 V = 1 and 0 V = 0 states.

$$\boxed{A + B = Q}$$

III. (A) 2-input NOT Gate :

For a single input NOT gate, the output Q is ONLY true when the input is "NOT" true, the output is the inverse or complement of the input giving the Boolean Expression of: (Q = NOT A).

Symbol	Truth Table	
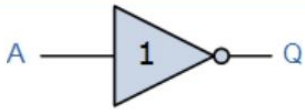 Inverter or NOT Gate	A	Q
	0	1
	1	0
Boolean Expression Q = NOT A or $\bar{A}$	Read as inversion of A gives Q	

III. (B)) 1-input NOT Gate 7404 IC :

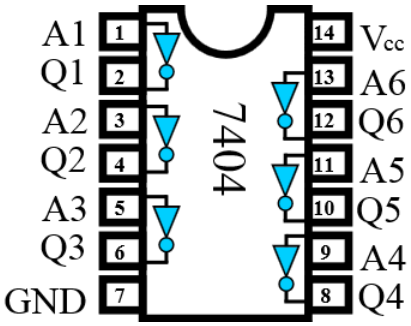

IC 7404 has six 1-input NOT gates. The figure shows the input and output of NOT gates. Use V_{cc} as +5 Volts. The input can be defined as +5 V = 1 and 0 V = 0 states.

$$\boxed{\bar{A} = Q}$$

IV. (A) 2-input NAND Gate :

The NAND Gates are a combination of the AND Gates with that of a NOT Gate or inverter. For a 2-input NAND gate, the output Q is False if BOTH input A and input B are true, giving the Boolean Expression of: (Q = not(A and B)).

Symbol	Truth Table		
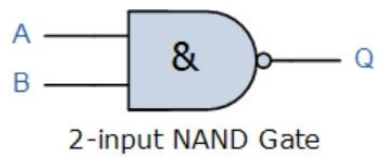 2-input NAND Gate	A	B	Q
	0	0	1
	0	1	1
	1	0	1
	1	1	0
Boolean Expression Q = $\overline{A.B}$	Read as A AND B gives NOT-Q		

IV. (B)) 2-input NAND Gate 7400 IC :

IC 7400 has four 2-input NAND gates. The figure shows the input and output of NAND gates. Use V_{cc} as +5 Volts. The input can be defined as +5 V = 1 and 0 V = 0 states.

$$\boxed{\overline{A.B} = Q}$$

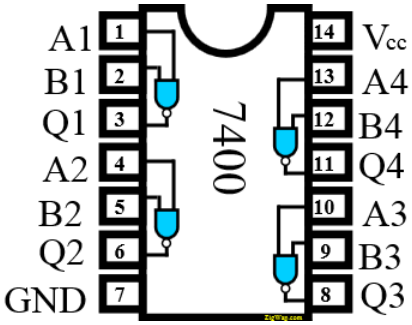

V. (A) 2-input NOR Gate :

The NOR Gates are a combination of the OR Gates with that of a NOT Gate or inverter. For a 2-input NOR gate, the output Q is true if BOTH input A and input B are NOT true, giving the Boolean Expression of: (Q = not(A or B)).

Symbol	Truth Table		
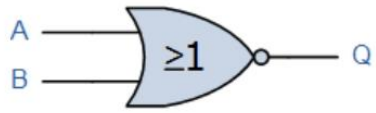 2-input NOR Gate	A	B	Q
	0	0	1
	0	1	0
	1	0	0
	1	1	0
Boolean Expression Q = $\overline{A+B}$	Read as A OR B gives NOT-Q		

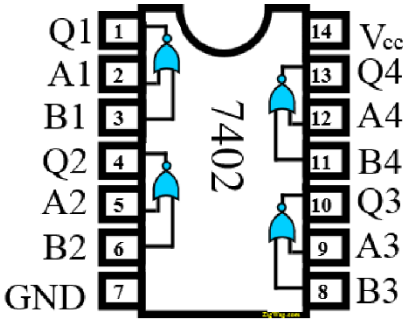

V. (B)) 2-input NOR Gate 7402 IC :

IC 7402 has four 2-input NOR gates. The figure shows the input and output of NOR gates. Use V_{cc} as +5 Volts. The input can be defined as +5 V = 1 and 0 V = 0 states.

$$\boxed{\overline{A+B} = Q}$$

VI. (A) 2-input Ex-OR (Exclusive OR) Gate :

The above logic gates are standard logic gates and there is also exist a special type of logic function called an Exclusive-OR Gate. This type of gate can be made using the above standard gates however, as this is widely used function, this is now available in standard IC form also. For a 2-input Ex-OR gate, the output Q is true if EITHER input A or if input B is true, but NOT both giving the Boolean Expression of: (Q = (A and NOT B) or (NOT A and B)).

Symbol	Truth Table		
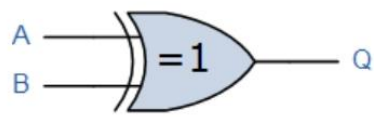 2-input Ex-OR Gate	A	B	Q
	0	0	0
	0	1	1
	1	0	1
	1	1	0
Boolean Expression Q = A ⊕ B			

VI. (B)) 2-input Ex-OR Gate 7486 IC :

IC 7486 has four 2-input Ex-OR gates. The figure shows the input and output of Ex-OR gates. Use V_{cc} as +5 Volts. The input can be defined as +5 V = 1 and 0 V = 0 states.

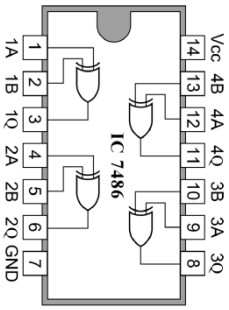

Boolean Algebra & Truth Tables

Example – 1 : Find the truth table of the following Boolean algebra.

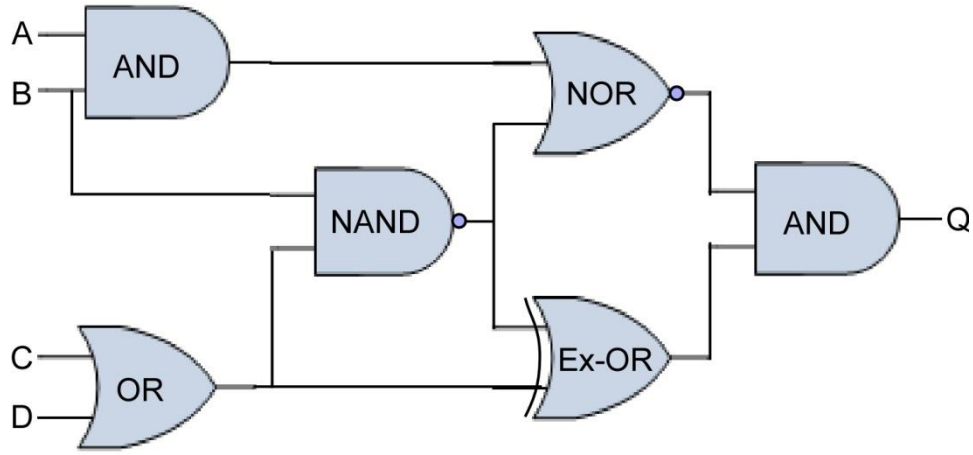

i) You construct the above Boolean circuit and find out the output of each gate level and also at final output Q (One can test the voltage at each step with the help of a digital voltmeter).

ii) Now you construct the same Boolean circuit using different ICs and show that the output follows same as Logic converter output.

Example – 2 : Find the truth table of the following Boolean algebra.

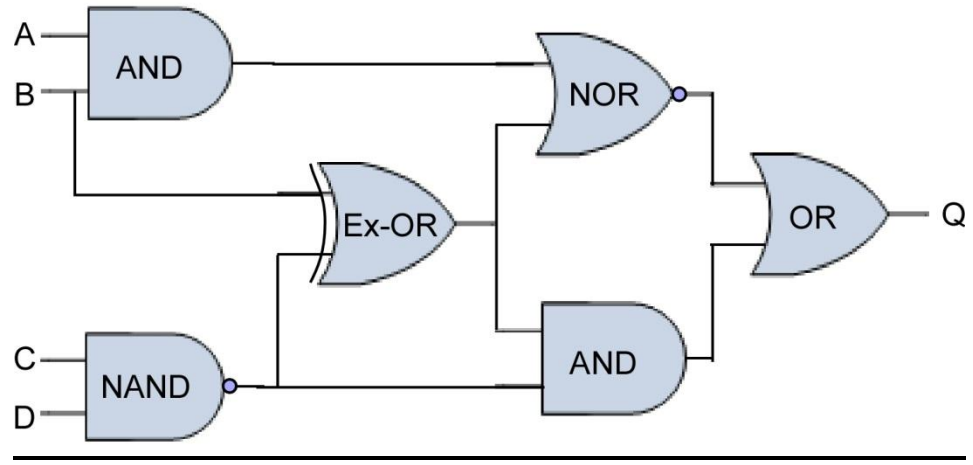

i) You construct the above Boolean circuit using different ICs and show that the output follows same as Logic converter output.

Example – 3 : Find the truth table of the following Boolean algebra.

i) You construct the below Boolean circuit using different ICs and show that the output follows same as Logic converter output.

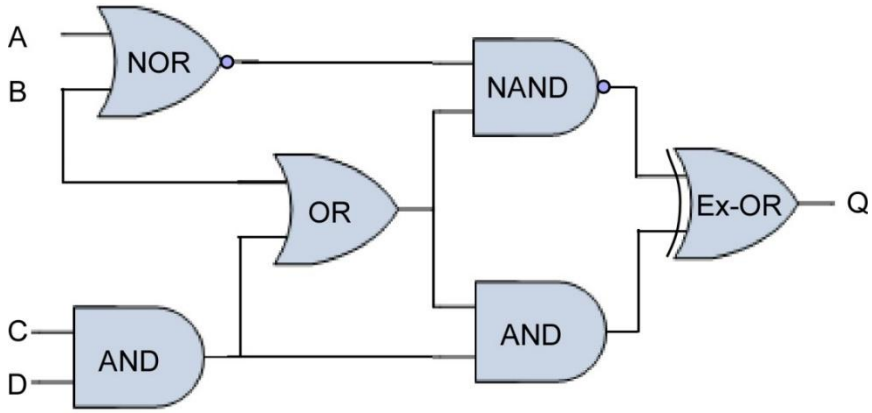

Truth Table :

Sl. No	A	B	C	D	Example – 1 Q	Example – 2 Q	Example – 3 Q
1	0	0	0	0			
2	0	0	0	1			
3	0	0	1	0			
4	0	0	1	1			
5	0	1	0	0			
6	0	1	0	1			
7	0	1	1	0			
8	0	1	1	1			
9	1	0	0	0			
10	1	0	0	1			
11	1	0	1	0			
12	1	0	1	1			
13	1	1	0	0			
14	1	1	0	1			
15	1	1	1	0			
16	1	1	1	1			

***